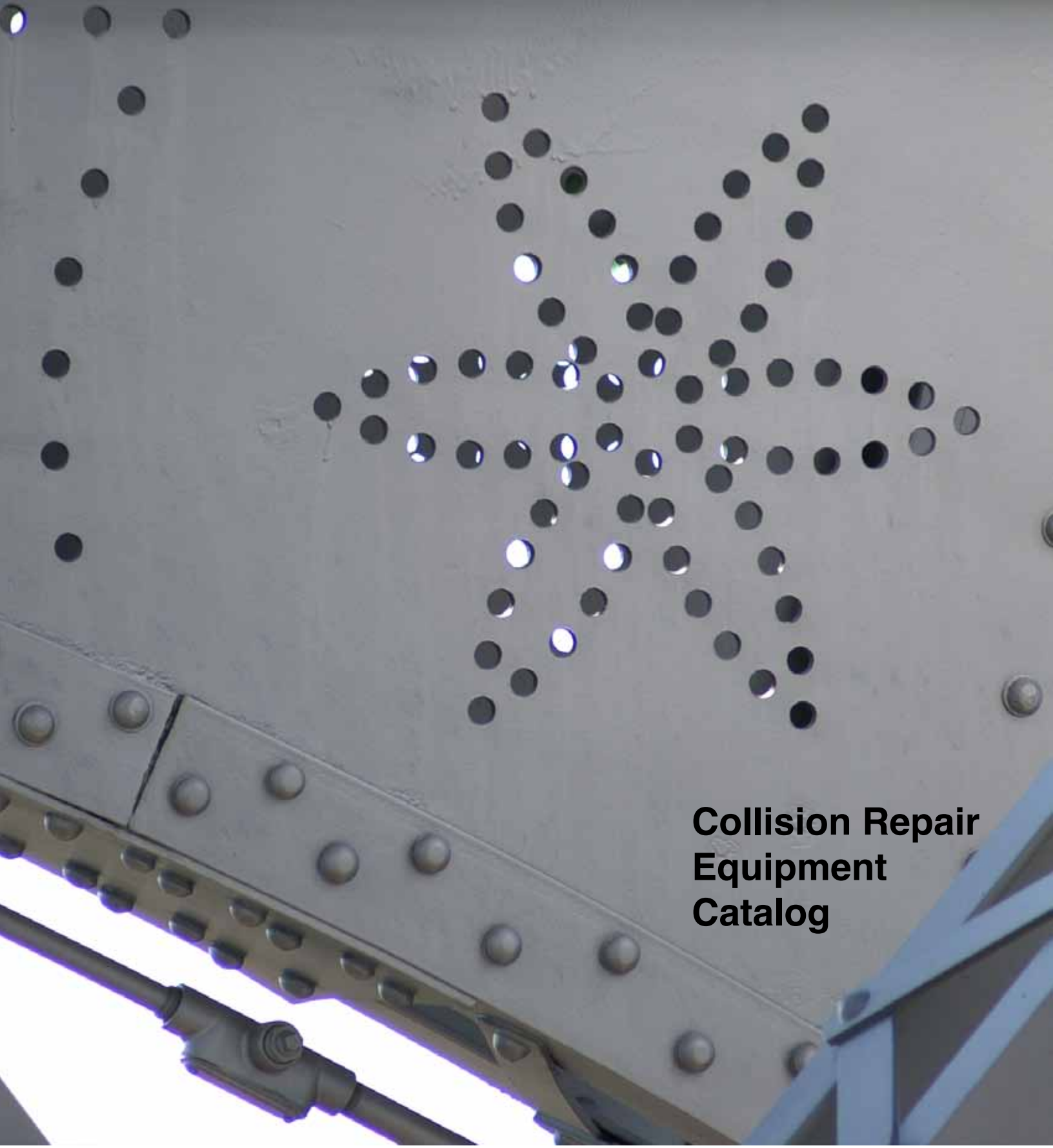

Collision Repair Equipment Catalog

STARALINER™
A Division of CJJ, Inc.

CHEETAH®

Catalog SL25

Staraliner.Com • 1-800-445-8244

STARALINER™
A Division of CJJ, Inc.

Manufacturer of Collision Repair Equipment

Simple. Strong. Machines that Work.

Simply Fast

Frame Machines

CHEETAH 360 II
Designed for unibody cars and light duty trucks.
See page 3

CHEETAH 18
Designed for unibody cars on up to extended cab trucks.
See page 4

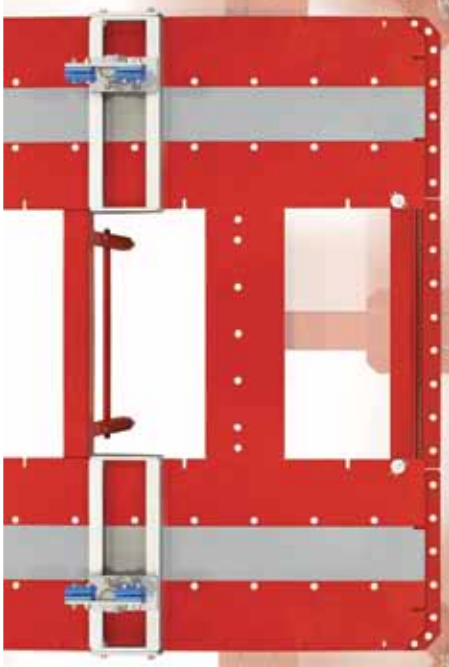

CHEETAH SF
Designed for unibody cars on up to extended cab trucks.
See page 5

CHEETAH 5500
Designed for unibody cars on up to full size four door heavy duty dually trucks. See page 6

CHEETAH SERIES 20
Designed for unibody cars on up to full size four door heavy duty dually trucks. See page 8

Auto Body Measuring

See page 11

Auto Body Tools

See pages 9-10

Replacement Parts

See page 9

Frame Machines - Made in the U.S.A.

- Specifications subject to change without notice.
- We check our information very carefully, however, an occasional error may happen. Therefore, we reserve the right to correct any inaccurate information.
- All brands and names are the property of their respective owners.
- To have your name removed from our mailing list, call 1-800-445-8244.
- Cover Photo: Aerial Lift Bridge, Duluth, MN
- CJJ, Inc.,1210 Fortune Ave., Detroit Lakes, MN 56501 U.S.A.

© CJJ, Inc. 2011 All Rights Reserved.

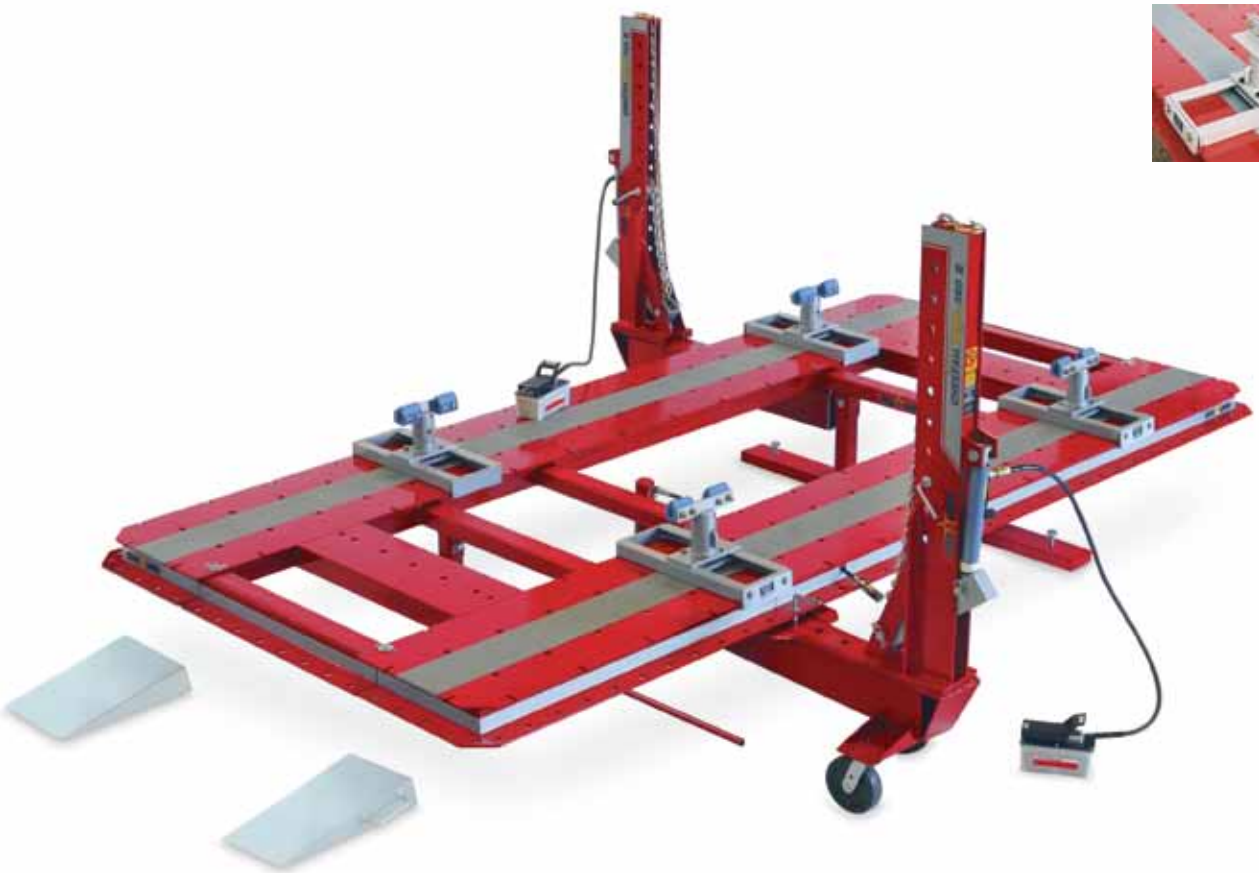

Specifications	Cheetah® 360 II
Length of bed (top)	15 ft. (457 cm)
Length w/twrs extended	20 ft. 9 in. (632 cm)
Width of bed	84 in. (213 cm)
Width w/towers extended	13 ft. 4 in. (406 cm)
Width of treadway	24 in. (61 cm)
Width between treadway	36 in. (91 cm)
Overall height	6 ft. 6 in. (198 cm)
Tower height	5 ft. (152 cm)
Working height	24 in. (61 cm)
Weight	3780 lbs. (1715 kg)
Power required for hyd.	100 psi air (6.89 bar)
Pulling power, hydraulics	10 ton (9 metric ton)
Pulling radius	360 degrees

Specifications subject to change without notice

Offset tower bases lets pulling towers move closer together.

Designed for unibody cars and light duty trucks.

CHEETAH® 360 II

9011150 Cheetah 15′ II W/HYD
9011152 Cheetah 15′ II W/ABC

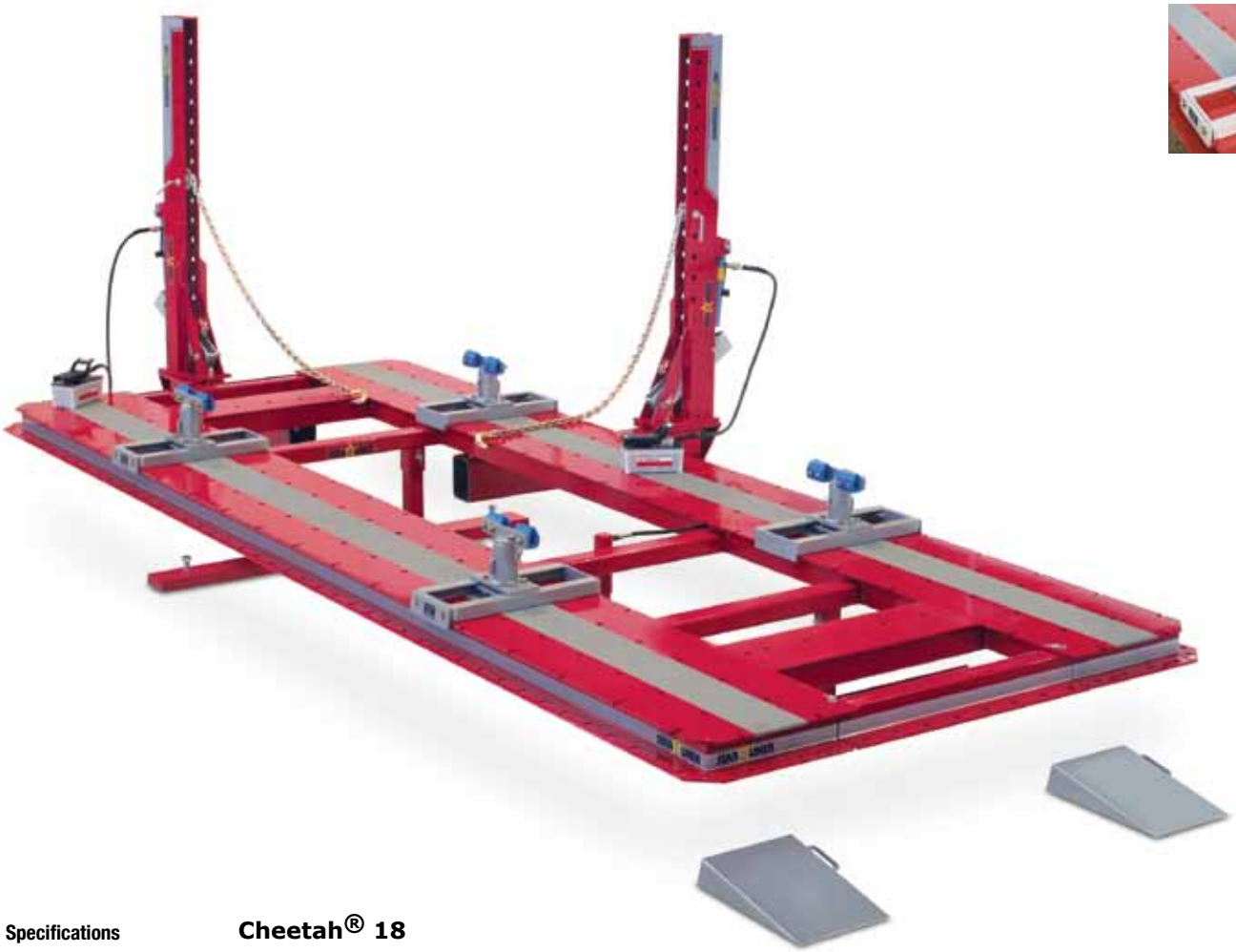

Specifications	Cheetah® 18
Length of bed (top)	18 ft. (549 cm)
Length w/twrs extended	23 ft. 9 in. (724 cm)
Width of bed	84 in. (213 cm)
Width w/towers extended	13 ft. 4 in. (406 cm)
Width of treadway	24 in. (61 cm)
Width between treadway	36 in. (91 cm)
Overall height	7 ft. 9 in. (236 cm)
Tower height	6 ft. (183 cm)
Working height	24 in. (61 cm)
Weight	4400 lbs. (1995 kg)
Power required for hyd.	100 psi air (6.89 bar)
Pulling power, hydraulics	10 ton (9 metric ton)
Pulling radius	360 degrees

Specifications subject to change without notice.

Offset tower bases lets pulling towers move closer together.

Designed for unibody cars on up to extended cab trucks.

9011180 Cheetah 18' II W/HYD Two Tower
9011182 Cheetah 18' II W/ABC Two Tower
9011183 Cheetah 18' III W/HYD Three Tower

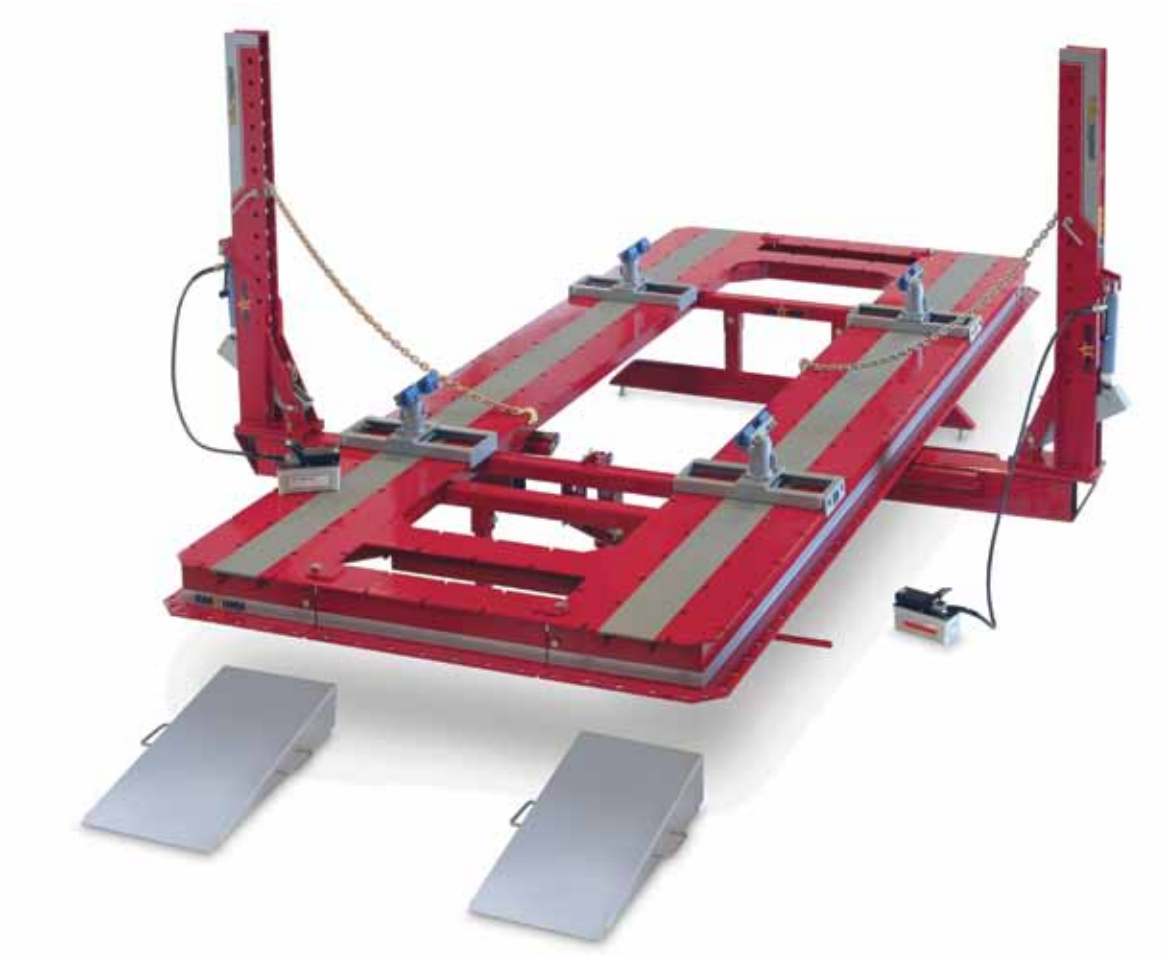

Specifications	Cheetah® SF 18	Cheetah® SF 20
Length of bed (top)	18 ft. (549 cm)	20 ft. (610 cm)
Length w/twrs extended	23 ft. 9 in. (724 cm)	25 ft. 10 in. (785 cm)
Width of bed	84 in. (213 cm)	92 in. (234 cm)
Width w/towers extended	13 ft. 4 in. (406 cm)	13 ft. 4 in. (406 cm)
Width of treadway	24 in. (61 cm)	28 in. (71 cm)
Width between treadway	36 in. (91 cm)	36 in. (91 cm)
Overall height	7 ft. 11 in. (241 cm)	7 ft. 11 in. (241 cm)
Tower height	6 ft. (183 cm)	6 ft. (183 cm)
Working height	26 in. (66 cm)	26 in. (66 cm)
Weight	4800 lbs. (2177 kg)	5500 lbs. (2495 kg)
Power required for hyd.	100 psi air (6.89 bar)	100 psi air (6.89 bar)
Pulling power, hydraulics	10 ton (9 metric ton)	10 ton (9 metric ton)
Pulling radius	360 degrees	360 degrees

Specifications subject to change without notice.

STARALINER™
A Division of CJJ, Inc.

Simply fast, wheel-less frame machine.

Designed for unibody cars on up to extended cab trucks.

CHEETAH® SF

9011001 Cheetah SF 18' II W/HYD
9011002 Cheetah SF 20' II W/HYD

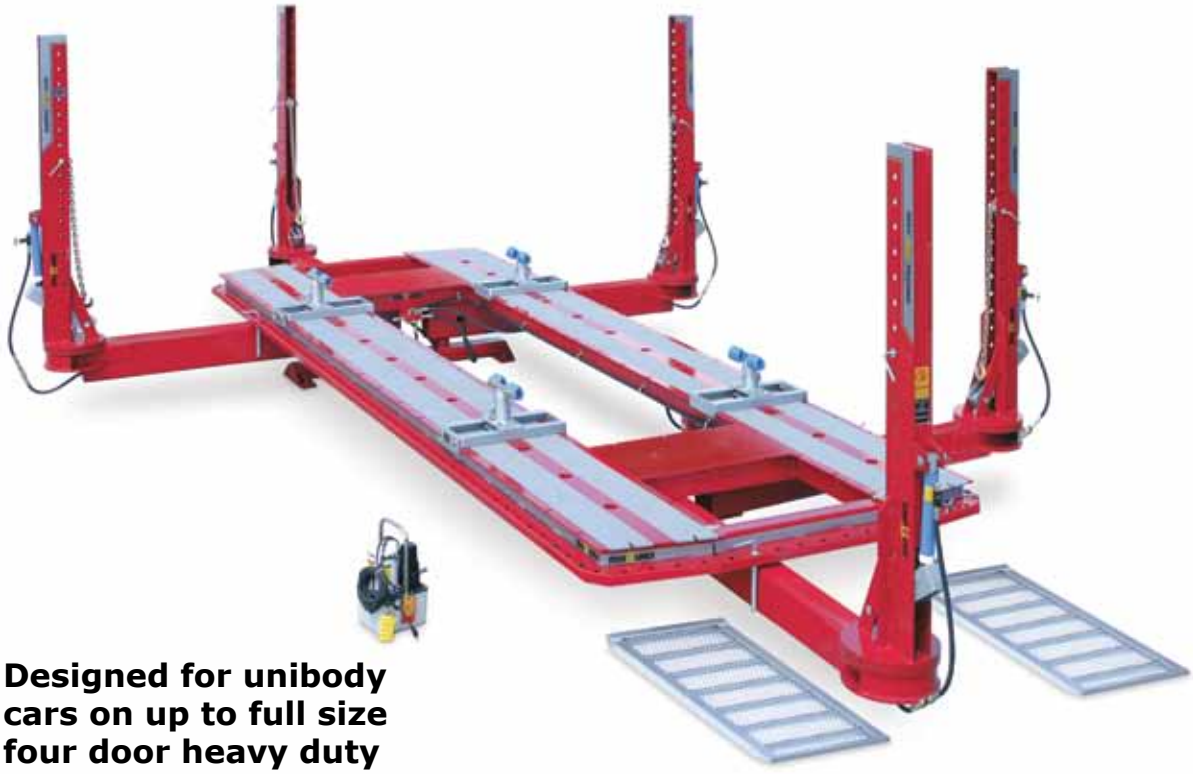

Designed for unibody cars on up to full size four door heavy duty dually trucks.

Specifications	Cheetah® 5500	Cheetah® 5500 20
Length of bed (top)	18 ft. (549 cm)	20 ft. (610 cm)
Length w/twrs extended	23 ft. 9 in. (724 cm)	25 ft. 10 in. (785 cm)
Width of bed	84 in. (213 cm)	92 in. (234 cm)
Width w/towers extended	13 ft. 4 in. (406 cm)	13 ft. 4 in. (406 cm)
Width of treadway	24 in. (61 cm)	28 in. (71 cm)
Width between treadway	36 in. (91 cm)	36 in. (91 cm)
Overall height	7 ft. 11 in. (241 cm)	7 ft. 9 in. (241 cm)
Tower height	6 ft. (183 cm)	6 ft. (183 cm)
Working height	24 in. (61 cm)	24 in. (61 cm)
Weight	4400 lbs. (1995 kg)	4400 lbs. (1995 kilos)
Power required for hyd.	100 psi air (6.89 bar)	100 psi air (6.89 bar)
Pulling power, hydraulics	10 ton (9 metric ton)	10 ton (9 metric ton)
Pulling radius	360 degrees	360 degrees

Specifications subject to change without notice.

CHEETAH® 5500

9011550 Cheetah 5500 18 With AIR/HYD
9011552 Cheetah 5500 18 With ABC & AIR/HYD
9011E55 Cheetah 5500 18 With ELE/HYD
9011650 Cheetah 5500 20 With AIR/HYD
9011E65 Cheetah 5500 20 With ELE/HYD

Designed for unibody cars on up to full size four door heavy duty dually trucks.

CHEETAH® SERIES 20

Specifications	Cheetah® Series 20	Cheetah® Series 24
Length of bed (top)	20 ft. (610 cm)	24 ft. (732 cm)
Length w/twrs extended	25 ft. 10 in. (787 cm)	29 ft. 10 in. (909 cm)
Width of bed	92 in. (234 cm)	92 in. (234 cm)
Width w/towers extended	14 ft. (427 cm)	14 ft. (427 cm)
Width of treadway	28 in. (71 cm)	28 in. (71 cm)
Width between treadway	36 in. (91 cm)	36 in. (91 cm)
Overall height	8 ft. 6 in. (259 cm)	8 ft. 6 in. (259 cm)
Tower height	6 ft. 8 in. (203 cm)	6 ft. 8 in. (203 cm)
Working height	24 in. (61 cm)	24 in. (61 cm)
Weight	6560 lbs. (2975 kg)	7680 lbs. (3484 kg)
Power required for hyd.	100 psi air (6.89 bar)	100 psi air (6.89 bar)
Pulling power, hydraulics	10 ton (9 metric ton)	10 ton (9 metric ton)
Pulling radius	360 degrees	360 degrees

Specifications subject to change without notice.

9011200 Cheetah 20′ II W/HYD
9011202 Cheetah 20′ II W/ABC
9011203 Cheetah 20′ III W/HYD
9011240 Cheetah 24′ II W/HYD
9011242 Cheetah 24′ II W/ABC
9011243 Cheetah 24′ III W/HYD

Pinchweld clamp & treadway design has changed from the photos shown.

Specifications	Cheetah® Floor Rack
Length of two treadways together	12 ft. (366 cm)
Width of treadway	21 in. (53 cm)
Tower height	6 ft. (183 cm)
Weight	360 lbs (163 kg)
Power required for hydraulics	100 psi air (6.89 bar)
Pulling power, hydraulics	10 ton (9 metric ton)

Specifications subject to change without notice

Cheetah Floor Rack System Consists of:

- 1 - 6' (183 cm) portable pulling post.
- 1 - hyd. pump, hose, and ram.
- 2 - 8' (244 cm) chains
- 2 - 12' (366 cm) chains
- 2 - 12' (366 cm) treadways sections
- 1 - (set of 4) pinchweld clamps
- 2 - portable ramps
- 14 - floor/anchor pots

Optional Tool Board #3

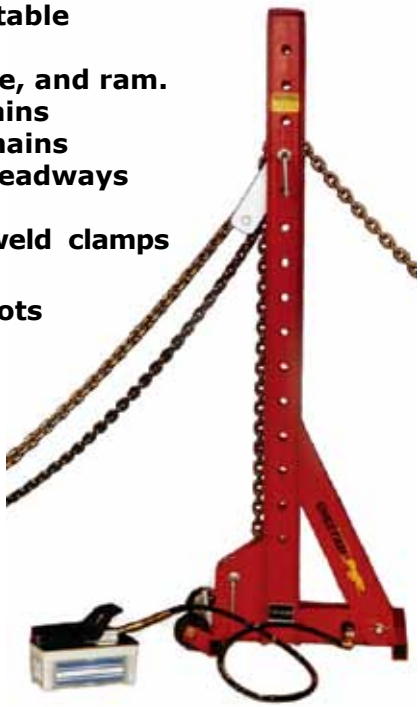

9025003 Cheetah Pulling Post
9025002 Cheetah Pulling Post w/Tool Board #3
9011100 Cheetah Floor Rack System

Pulling Tower Options

Cheetah® Tower (tower & base w/hyd)

9025100 5' (152 cm) Tower for Cheetah 360 II

9025101 6' (183 cm) Tower for Cheetah 18

9025102 6' (183 cm) Tower for Cheetah SF

9025104 6'8" (203 cm) Tower for Cheetah Series 20 and the Cheetah Series 24

Looking for Round Towers or Parts for Round Towers?

Call Us.

Cheetah® SF Tower (tower & base w/hyd)

9025105

Cheetah® Double Pull Tower (tower & base w/hyd)

9025103 6' (183 cm) Double Pull Tower w/hyd

Auto Body Tools

4" Ram
066C104CRAM

Ram Base
066420062

Jacking Beam
9031054

Bumper Puller
7630003B

Chain Shortener
B9753000

Chain Shortener Helper Bar
B9753001

GoJak Model 5000 - Each
1085000

Manyhole Wide Bar
7634048

Honda Clmp Set 4/12J
9020011

Mercedes Clmp/Set 4-43IBS
9020013

DBL Jack
108DBT2

Wheel Stand - Pair 9025012

Dead Car Dollies
9025303

Electric Winch w/Remote
9024025

Cheetah Downpull Kit
9025008

Overhead Pull
9025010

TRL Jack
108TBT2

Bodylift
9025011

Replacement Parts

Foot Pump
066PA6

Gauge Fitting
0669670

15000 PSI (1034 bar) **Gauge**
068AF-15M-25

72" (183 cm) **Hydraulic 3/8"** (9.525 cm) **Hose, M/M**
0677238M/M

120" (305 cm) **Hydraulic 3/8"** (9.525 cm) **Hose, M/M**
0671200M/M

Ram, 10 Ton (9 metric ton), **10 1/8"** (25.7 cm) **Stroke**
066420622RAM
066C1010CBT

HYD Repair Kit
066300433

Coupling - Male
9041018

Square D Pendant
1039001bw72y

Electric 1/2 hp Pump 115v 60hz
06665703

Hose Half Coupler - Male
0669798

Ram End - Female
9041019

Ram, 10 Ton, (9 metric ton) **6"** (15.2 cm) **Stroke**
066420621RAM
066C106CBT

Cheetah Claws
9020006

Pinchweld Clamp 4
9025019

Main Tower Head
900-9033030

Chainwheel w/Pin&HDL
9025016
108DBT2

3/8 Chain - 10 ft (9.525 cm) (304 cm)
2026010

Tool Package "A" - 135 lbs (61 kg)

0100 B
0205 Dyna-mo C
0200 C
0405 Dyna-mo W
0305 Dyna-mo Jr.
1650 Double Eye Chain Hook
1900 Quick Hook
1100 Handy Link
1250 Panel Puller
1200 Twin Pull
6400 Deep Hk Set
4150 Double Looper
3030 Mo Hook (4 ea.)
2400 Mo #3MA
3110 Sm Flat Nose Metal Hook
3120 Lg Flat Nose Metal Hook
3130 Sm Rd Nose Metal Hook
3140 Lg Rd Nose Metal Hook
6210 3/8" Grab Hook
9020003 Unibody Clamp Bar
7634048 Many Hole Bar
6300 Nylon Sling
6350 Cable Sling
2' x 4' (61 cm x 122 cm) Display Boards (2 ea.)

Tool Package "B" 9020020 - 324 lbs (147 kg)

Pulling Chains 4,6,8,10,12 ft. (121,183,245,305,366 cm)
Wheel Stands (5 ea.)
Winch
Down Pull
Low Pull
Body Lift
Overhead Pull
2' x 4' (61 cm x 122 cm) Display Boards (2 ea.)

Value Package
9020024 - 231 lbs (105 kg)

STARALINER

Auto Body Tools

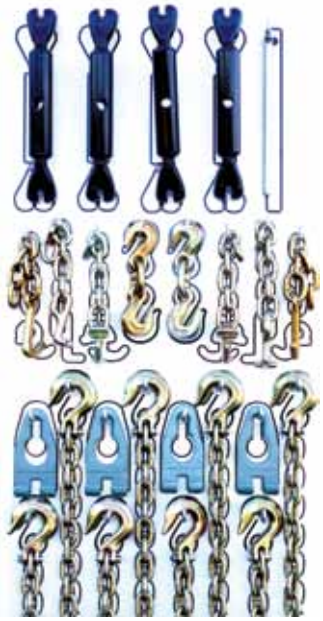

T4 Truck Tie Down Board
9020026 - 165 lbs (75 kg)

Chain Shortener (4 ea.)
Helper Bar
Ford Hook (2 ea.)
Chrysler Hook (2 ea.)
GM Hook (2 ea.)
Double Grab Hook (2 ea.)
Mo Track Hook (4 ea.)
4' (121 cm) Chains w/ Slip Hook (4 ea.)
6' (183 cm) Chains w/ Slip Hook (4 ea.)
2' x 4' (61 cm x 122 cm) Tool Board

Pushing Post
24" (61 cm) Assembly w/Ram
9025018
134 lbs (61 kg)

Full Frame Stand - set of 4 w/Adapters
9025031
97 lbs (44 kg)

Auto Body Measuring

Tool Package "C"

Mo-Pro Gauges
9020023
78 lbs (35 kg)

Universal Tram Gauge
Deluxe Centerline Gauge
Strut Tower Alignment Gauge
3 - 2'x4' (61 cm x 122 cm) Display Boards

Auto-Vision

Measuring Plus Four Wheel Alignment

Auto-Vision
121F3000
delivery, installation, training extra
Product of
Star-Track Systems, Inc.

Tru-Point™
Structural Diagnostic System
by KJ KANSAS JACK

FAST... EASY... PROFITABLE...

Tru-Point
Structural diagnostic's for damaged vehicles.
118EECR903A

Tru-Point™
Sonic 360
Computerized Electronic Measuring System

KJ KANSAS JACK
Get it straight.

REPEATABLE... RELIABLE... ACCURATE...

Tru-Point Sonic 360
Computerized Electronic Measuring System
990-C08K8157

All brands and names are the property of their respective owners.

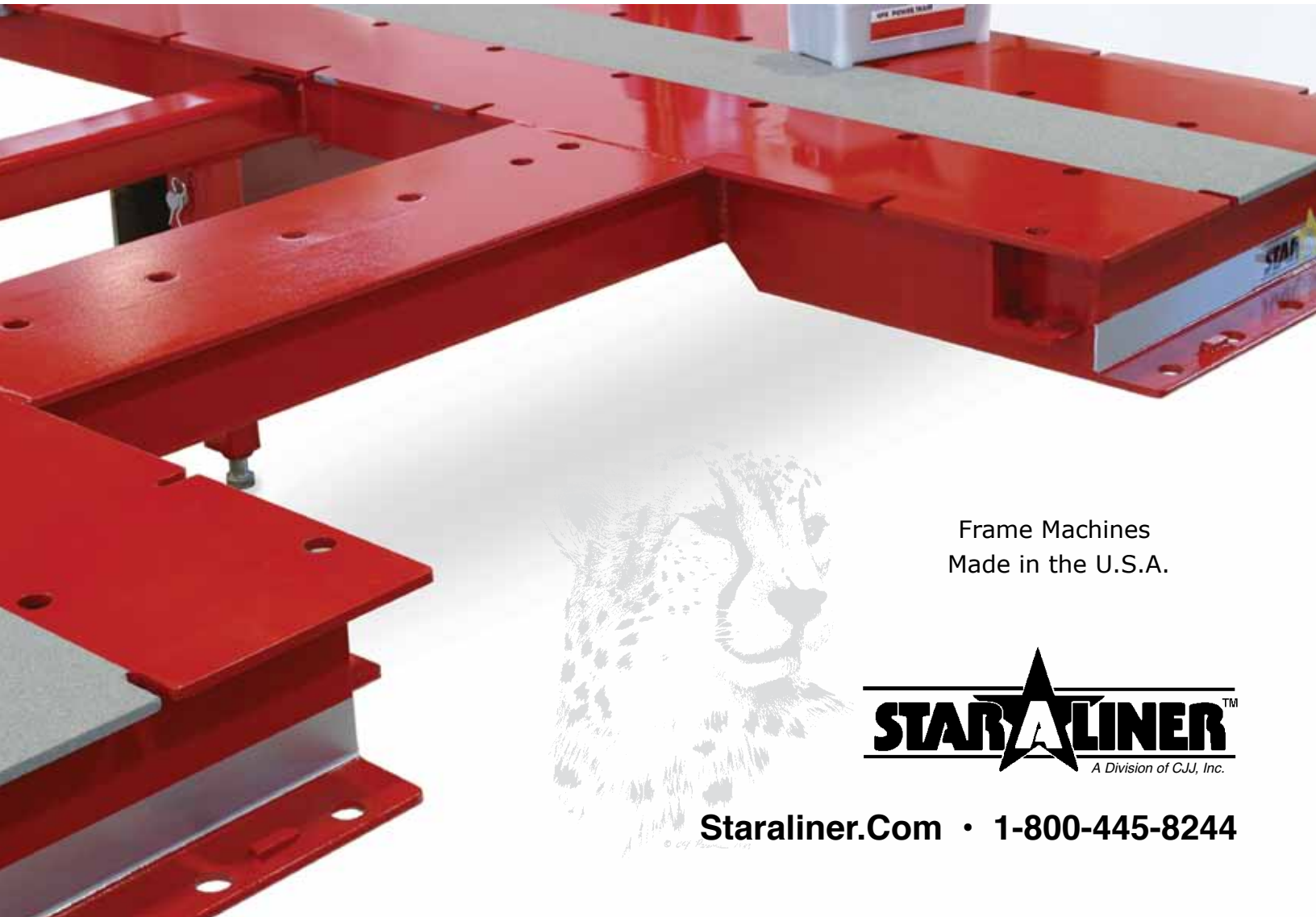

Frame Machines
Made in the U.S.A.

STARALINER™
A Division of CJJ, Inc.

Staraliner.Com • 1-800-445-8244